Assembly instructions K2090

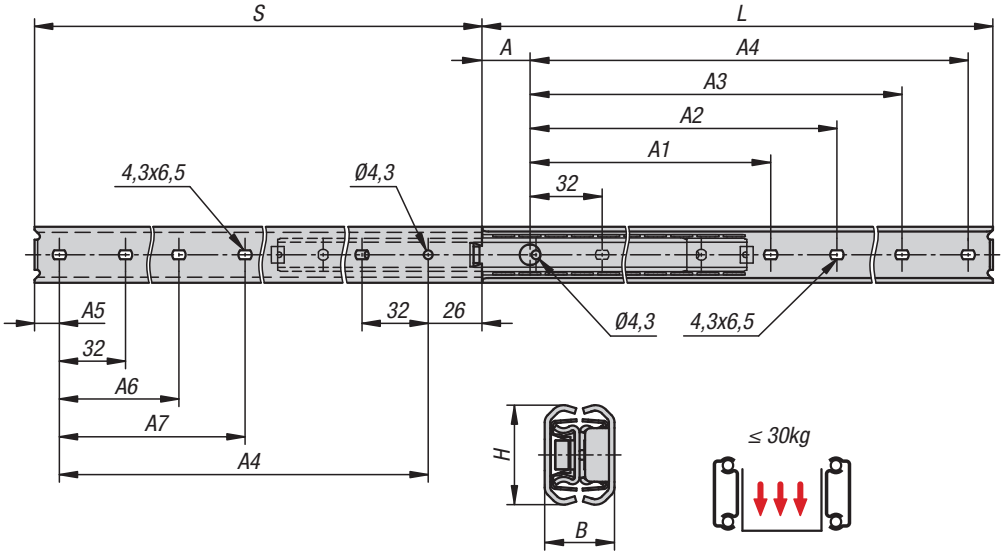

Order No.	L	S	A	A1	A2	A3	A4	A5	A6	A7	B	H	Load-bearing capacity per pair kg
K2090.0200	200	205,5	26	-	-	128	160	14	-	-	19	27,1	22
K2090.0250	250	255	26	-	-	160	192	32	-	-	19	27,1	25
K2090.0300	300	304	26	-	-	224	256	18	-	-	19	27,1	28
K2090.0350	350	353	26	-	-	256	288	36	-	-	19	27,1	30
K2090.0400	400	402	26	192	224	320	352	22	128	160	**19**	**27,1**	30
K2090.0450	450	452	26	224	256	384	416	8	160	192	**19**	**27,1**	28
K2090.0500	500	501	26	256	288	416	448	26	160	192	**19**	**27,1**	25
K2090.0550	550	550	26	256	288	480	512	12	224	256	**19**	**27,1**	22
K2090.0600	600	599	26	288	320	512	544	30	224	256	**19**	**27,1**	20

All fastening positions must be used so that the maximum load value is achieved.
Install the slide on or below the drawer centre line.
Not suitable for flat mounting.

Assembly instructions K2090
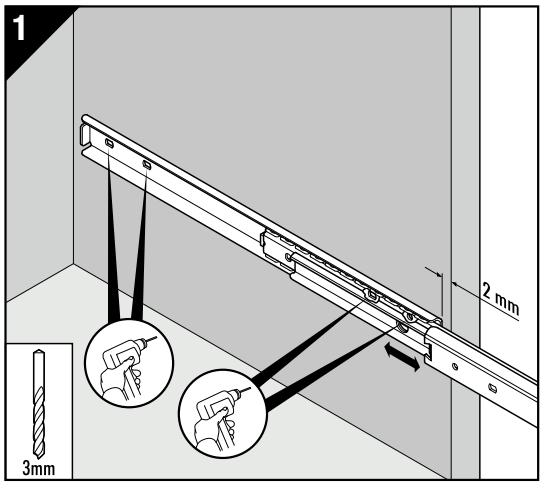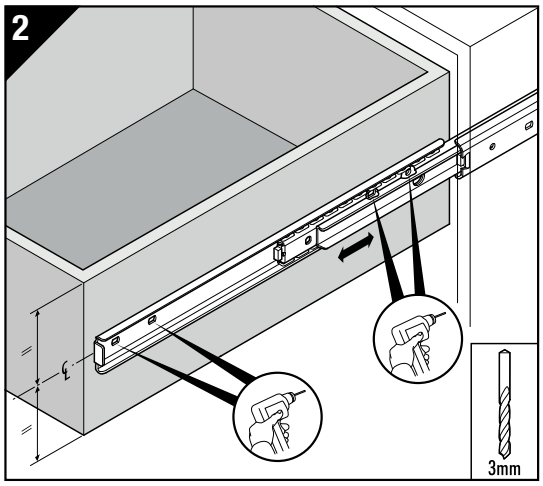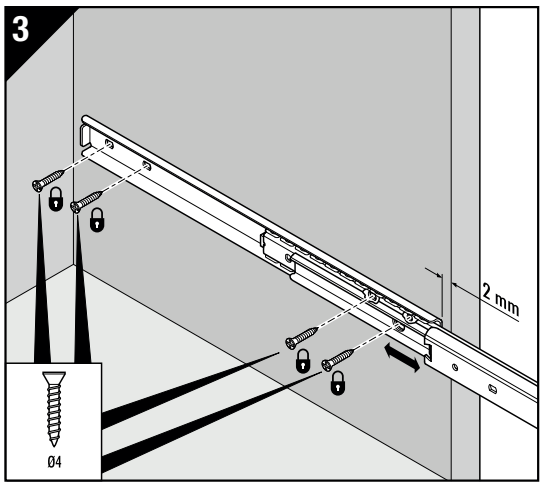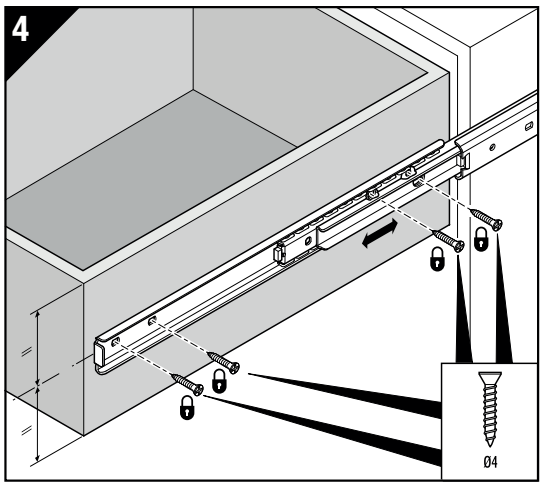
Rail fastening